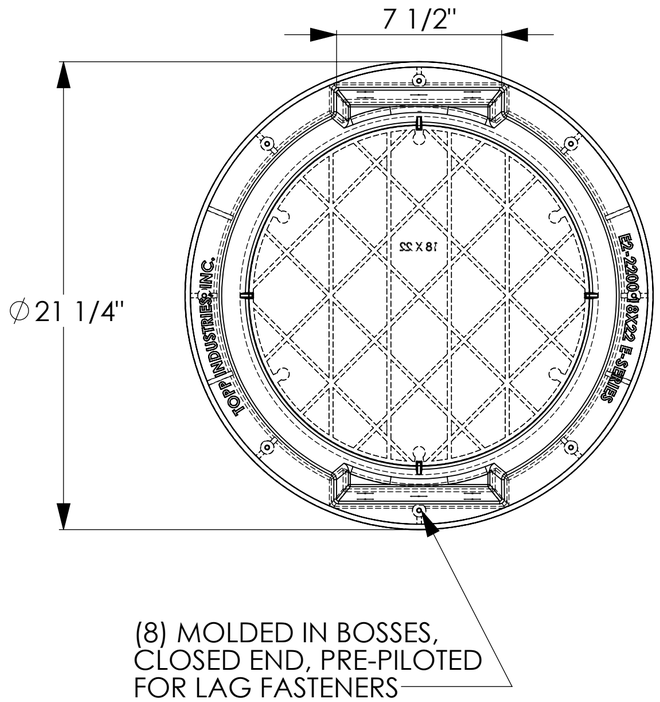

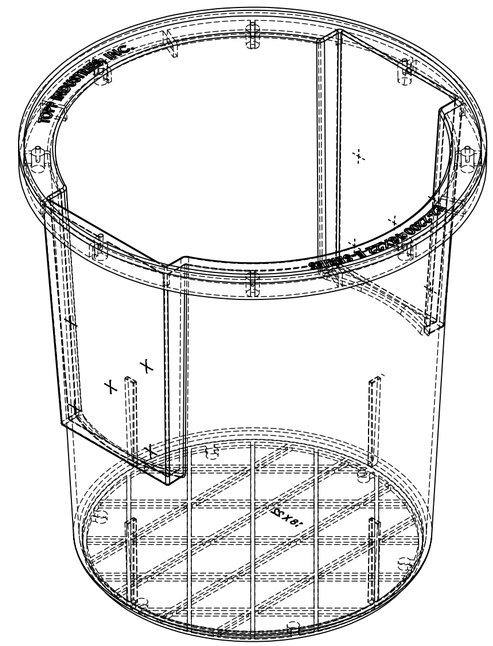

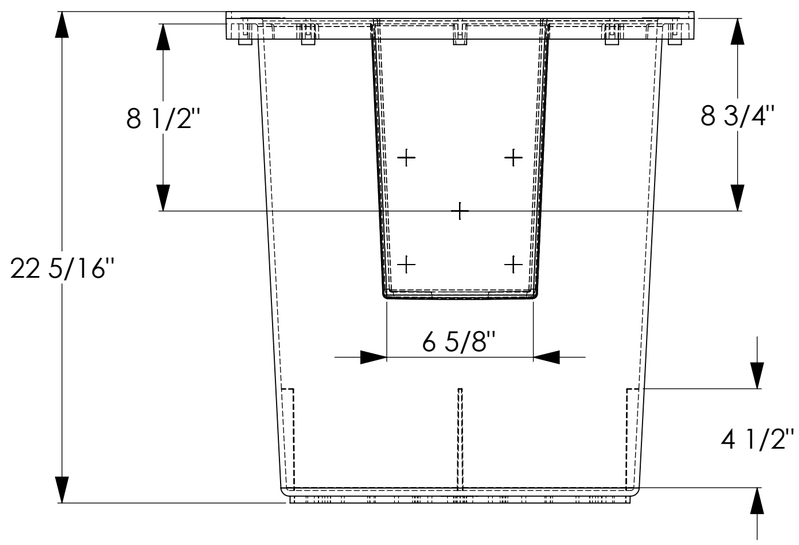

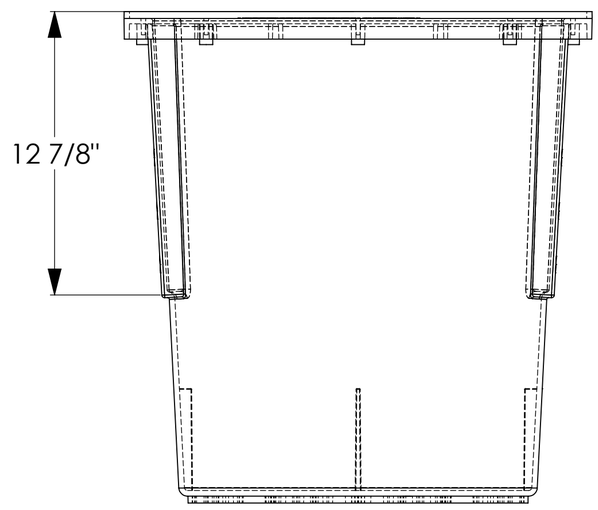

TOPP INDUSTRIES INCORPORARED
P.O. BOX 420 ^ HWY. 25 N.
ROCHESTER, IN. 46975
(800) 354-4534 FAX: (574) 223-6106

UNLESS OTHERWISE SPECIFIED:
DIMENSIONS ARE IN MILLIMETERS
SURFACE FINISH:
TOLERANCES:
LINEAR:
ANGULAR:

PUMP & DISCONNECT:
SO:
PO:

DO NOT SCALE DRAWING
REVISION 00

	NAME	DATE
DRAWN	dg	7/16/2015
CHK'D		
APPV'D		
MFG		
Q.A		

MATERIAL:
WEIGHT:

TITLE: 18x22 SF Basin FP Edit M March 16 2015

18x22 Structural Foam Basin

DWG NO. **E-Series 18x22 Basin** A2

SCALE:1:5
SHEET 1 OF 1