JIM MURRAY, INC.
Your Partners in Pumping Since 1958
N116 W18455 Morse Drive • Germantown, WI 53022 • 1-262-253-1353

PVL-EC-MAN
Manual

EN ENGLISH

This owner's manual will provide you with information required to safely own and operate Jim Murray, Inc. EC Series pumps. The pump you have purchased is a submersible effluent pump for use in basins, effluent, wastewater, and other non-explosive, non-corrosive, non-abrasive liquids with up to 1/2" spherical solids.

The Jim Murray, Inc. EC Series unit you have purchased is of the highest quality workmanship and material. It has been engineered to give you long and reliable service.

The Jim Murray, Inc. EC Series pumps are carefully packaged, inspected, and tested to ensure safe operation and delivery. When you receive your pump, examine it carefully to determine that there are no broken or damaged parts that may have occurred during shipment. If damage has occurred, make notation and notify the firm that you purchased the pump from. They will assist you in replacement or repair, if required.

READ INSTRUCTIONS CAREFULLY BEFORE ATTEMPTING TO INSTALL, OPERATE OR SERVICE THE JIM MURRAY, INC. EC SERIES PUMP. KNOW THE PUMP APPLICATION, LIMITATIONS, AND POTENTIAL HAZARDS. PROTECT YOURSELF AND OTHERS BY OBSERVING ALL SAFETY INFORMATION. FAILURE TO COMPLY WITH INSTRUCTIONS COULD RESULT IN PERSONAL INJURY AND/OR PROPERTY DAMAGE! RETAIN INSTRUCTIONS FOR FUTURE REFERENCE.

SAFETY GUIDELINES

⚠ WARNING ⚠

1. Disconnect the pump from the power source before servicing or removing any component.
2. Do not use to pump flammable or explosive fluids such as gasoline, fuel oil, kerosene, etc. DO NOT use in explosive atmospheres or hazardous locations as classified by NEC, ANSI/NFPAT. Pump should be used with liquids compatible with pump component materials.
3. Do not handle the pump with wet hands or when standing on a wet or damp surface or in water.
4. Do not pull the pump out of the water by the power cord when the pump is operating or connected to power source.
5. This pump is supplied with a grounding conductor and/or grounding-type attachment plug. To reduce the risk of electrical shock, be certain that it is connected to a properly grounded grounding-type receptacle.
6. The National Electric Code requires a ground fault circuit interrupter (GFCI) be installed in the branch circuit supplying fountain equipment, pools, etc.
7. In any installation where property damage and/or personal injury might result from an inoperative or leaking pump due to power outages, discharge line blockage, or any other reason, a backup system(s) and/or alarm should be used.
8. Support pump and piping when assembling and when installed. Failure to do so may cause piping to break, pump to fail, motor bearing failures, etc.
9. This pump's motor housing is filled with a dielectric oil for motor heat transfer and lifetime lubrication of the bearings. This oil is non-toxic to aquatic life. However, suffocation can occur if oil is left on the water surface. If oil escapes the motor housing it can be removed from the surface quickly by placing newspapers on the water surface to soak up the oil.
10. The pump motor is equipped with an automatic resetting thermal protector and may restart unexpectedly. Protector tripping is an indication of motor overloading as a result of excessively high or low voltage, inadequate wiring, incorrect motor connections, or a defective motor or pump.

ELECTRICAL CONNECTIONS

⚠ WARNING ⚠

1. Check the pump label for proper voltage required. Do not connect to voltage other than that shown.
2. If pump is supplied with a 3-prong electrical plug, the third prong is to ground the pump to prevent possible electrical shock hazard. DO NOT REMOVE the third prong from the plug. A separate branch circuit is recommended. Do not use an extension cord. Do not cut plug from the cord. If the plug is cut or the cord is shortened, then this action will void the warranty.
3. Check local electrical and building codes before installation. The installation must be in accordance with their regulations as well as the most recent National Electrical Code (NEC).
4. To conform to the National Electrical Code, all pumps must be wired with 14 AWG or larger wire. For runs to 250', 14 AWG wire is sufficient. For longer runs, consult a qualified electrician or the factory.
5. Pump should be connected or wired to its own circuit with no other outlets or equipment in the circuit line. Fuses and circuit breaker should be of ample capacity in the electrical circuit.
6. Do not modify the pump power cord except to shorten it to fit into a control panel. Any splice between the pump and the control panel must be made within a junction box and mounted outside of the basin and comply with the National Electrical Code.

CONSULT OWNER'S MANUAL ILLUSTRATIONS FOR PROPER ASSEMBLY AND DISASSEMBLY OF YOUR JIM MURRAY, INC. EC SERIES PUMP.

OPERATION

1. Install pump in a suitable basin that is at least 18" in diameter and 22" deep. Check and follow local plumbing codes.
2. Pump features a 1-1/2" female NPT discharge.
3. Clean debris and inspect basin and sump for obstructions. Pump must be placed on a hard level surface. Never place pump directly on clay, earth or gravel surfaces. Clean any sediment, mud or sand from basin.
4. A free-flow check valve that will easily pass solids should be used in the discharge line to prevent backflow of liquid into the basin.

   CAUTION: For the best performance of check valves, when handling solids install in a horizontal position or at an angle of no more than 45°.
5. Do not restrict the intake side of these pumps. Restricting the intake may cause damage to the seal and may starve the pump. If you require reduced flow rates, then place a valve on the discharge side of the pump or if flexible vinyl tubing is used, a clamp can be used on the tubing to restrict the flow.

6. Do not let the unit run dry (without liquid). It is designed to be cooled by pumping fluid. You may damage the seal and the motor may fail if the pump is allowed to run dry.
7. If the unit is going to be idle for a period of time, follow the cleaning instructions outlined in the next section. Do not let the unit freeze in the wintertime. This may cause cracking or distortion that may destroy the unit.

SERVICE INSTRUCTIONS

⚠ WARNING ⚠

MAKE CERTAIN THE UNIT IS DISCONNECTED FROM THE POWER SOURCE BEFORE ATTEMPTING TO SERVICE OR REMOVE ANY COMPONENT!

1. If pump does not operate properly, consult the troubleshooting chart. If trouble cannot be located with these steps shown, consult your pump dealer or installer (plumber).
2. This unit is permanently lubricated. Oiling is not required. Do not, in any case, open the sealed portion of the unit or remove housing screws.
3. Periodic cleaning of the pump parts will prolong the LIFE and EFFICIENCY of the pump. Refer to the assembly and disassembly of the pumping head.
4. Remove screws that hold base to volute and clean impeller and volute passage. Do not use strong solvents on impeller.
5. Be sure impeller turns freely after cleaning.
6. **WARNING:** DO NOT REMOVE IMPELLER. REMOVAL OF IMPELLER REQUIRES SPECIAL TOOLS AND IS TO BE DONE ONLY BY AN AUTHORIZED SERVICE CENTER. DO NOT REMOVE MOTOR HOUSING COVER. WARRANTY IS VOID IF MOTOR HOUSING COVER, IMPELLER OR SEALS HAVE BEEN REMOVED.
7. Be certain power cord is in good condition and contains no nicks or cuts.

TROUBLESHOOTING

PROBLEM	PROBABLE CAUSES	CORRECTIVE ACTION
Pump does not turn on.	Pump not plugged in.	Plug in pump.
	Circuit breaker shut-off or fuse removed.	Turn on circuit breaker or replace fuse.
	Defective motor.	Have pump serviced by authorized service center.
Pump will not shut off.	Pump is air locked.	Shut power off for approximately 1 minute, then restart. Repeat several times to clear air from pump.
	Liquid inflow matches pump capacity.	Larger pump required.
Pump runs but does not discharge liquid.	Check valve installed backwards.	Check flow indicating arrow on check valve body to ensure it is installed properly.
	Check valve stuck or plugged.	Remove check valve and inspect for proper operation.
	Lift too high for pump.	Check rating table.
	Inlet to impeller plugged.	Pull pump and clean.
	Pump is air locked.	Shut power off for approximately 1 minute, then restart. Repeat several times to clear air from pump.
Pump does not deliver rated capacity.	Lift too high for pump.	Check rated pump performance.
	Low voltage, speed too slow.	Check for proper supply voltage to make certain it corresponds to nameplate voltage.
	Impeller or discharge pipe is clogged.	Pull pump and clean. Check pipe for scale or corrosion.
	Impeller wear due to abrasives.	Replace worn impeller.
Pump cycles continually.	No check valve in long discharge pipe allowing liquid to drain back into sump.	Install a check valve in discharge line.
	Check valve leaking.	Inspect check valve for correct operation.
	Basin too small for inflow.	Install larger basin.

Figure 1 - Typical Installation

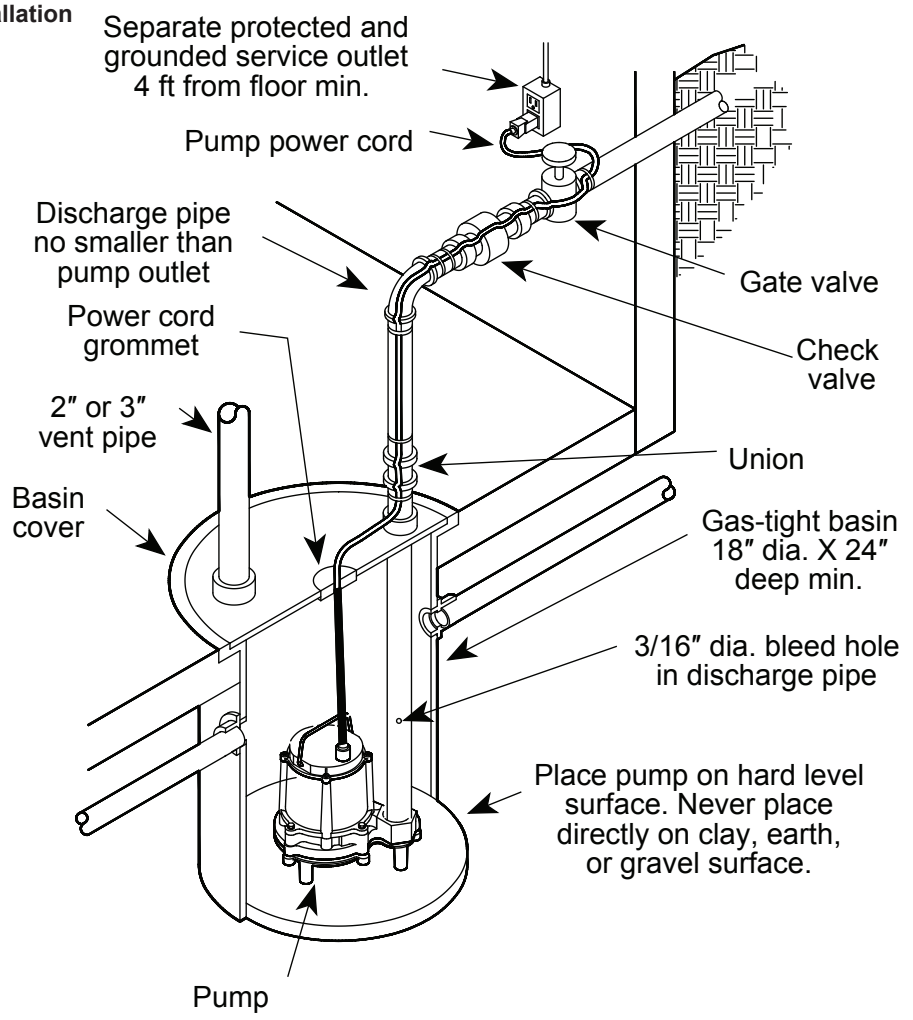

REPLACEMENT PARTS		
ITEM #	**DESCRIPTION**	**BALLOON NUMBER**
110970103	Cover Assembly, 115 V, Manual, 20' Cord	1
110970401	Volute Base, Plastic, with Gasket	2

Figure 2

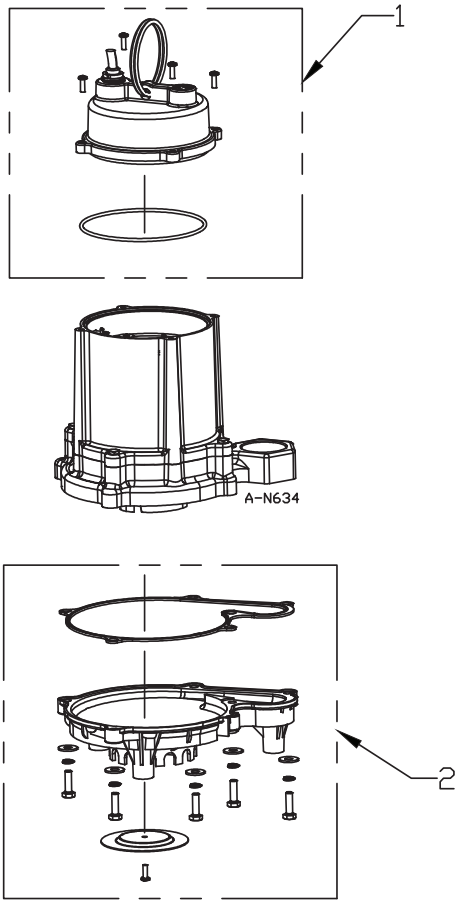

THREE (3) YEAR LIMITED WARRANTY
SUMP, EFFLUENT, AND RESIDENTIAL SEWAGE

INTRODUCTION

Jim Murray, Inc. EC Series pumps are recommended for use in sumps, basins or lift stations and suitable for pumping basement drainage water, effluent, wastewater and other non-explosive, non-corrosive, non-abrasive liquids not above 140 °F with 1/2" solids handling ability. (NOT TO BE USED FOR SEWAGE WATER EXCEPT TO PUMP SEPTIC TANK EFFLUENT.)

Jim Murray, Inc. EC Series pumps are guaranteed to be in perfect condition when they leave our factory. During the time periods and subject to the conditions hereinafter set forth, Jim Murray, Inc. will repair or replace to the original user or consumer any portion of your new Jim Murray, Inc. product which proves defective due to materials or workmanship of Jim Murray, Inc. Contact your nearest Jim Murray, Inc. dealer for warranty service. At all times Jim Murray, Inc. shall have and possess the sole right and option to determine whether to repair or replace defective equipment, parts, or components. Damage due to lightning or conditions beyond the control of Jim Murray, Inc. is NOT COVERED BY THIS WARRANTY.

WARRANTY PERIOD

PUMPS: 36 months from date of purchase.

LABOR, ETC. COSTS: Jim Murray, Inc. shall IN NO EVENT be responsible or liable for the cost of field labor or other charges incurred by any customer in removing and/or affixing any Jim Murray, Inc. product, part or component thereof.

THIS WARRANTY WILL NOT APPLY:

1) to defects or malfunctions resulting from failure to properly install, operate, or maintain the unit in accordance with printed instructions provided.
2) to failures resulting from abuse, accident or negligence.
3) to normal maintenance services and the parts used in connection with such service
4) to units which are not installed in accordance with applicable local codes, ordinances and good trade practices.
5) unit is used for purposes other than for what it was designed and manufactured.
6) If pump exposed to but not limited to the following: sand, gravel, cement, grease, plaster, mud, tar, hydrocarbons, or hydrocarbon derivatives (oil, gasoline, solvents, etc.) or other abrasive or corrosive substances.
7) if pump has been used for continuous pumping of suitable liquids above 140 °F.
8) if power cord has been cut or spliced
9) if pump has been dismantled by customer. (Dealer only can dismantle pump for field service.)

RETURN OR REPLACED COMPONENTS: Any item to be replaced under the Warranty must be returned to Jim Murray, Inc. or such other place as Jim Murray, Inc. may designate, freight prepaid.

PRODUCT IMPROVEMENTS: Jim Murray, Inc. reserves the right to change or improve its products or any portions thereof without being obligated to provide such a change or improvement for units sold and/or shipped prior to such change or improvement.

DISCLAIMER: Any oral statements about the product made by the seller, the manufacturer, the representatives or any other parties, do not constitute warranties, shall not be relied upon by the user, and are not part of the contract for sale. Seller's and manufacturer's only obligation, and buyer's only remedy, shall be the replacement and/or repair by the manufacturer of the product as described above. Neither seller nor the manufacturer shall be liable for any injury, loss or damage, direct, incidental or consequential (including, but not limited to, incidental or consequential damages for lost profits, lost sales, injury to person or property, or any other incidental or consequential loss), arising out of the use or the inability to use the product, and the user agrees that no other remedy shall be available to it. Before using, the user shall determine the suitability of the product for his intended use, and user assumes all risk of liability whatsoever in connection therewith. The warranty and remedy described in this limited warranty is an EXCLUSIVE warranty and remedy and is IN LIEU OF any other warranty or remedy, expressed or implied, which other warranties and remedies are hereby expressly EXCLUDED, including but not limited to any implied warranty of MERCHANTABILITY OR FITNESS FOR A PARTICULAR PURPOSE. Some states do not allow the exclusive or limitation of incidental or consequential damages, so the above limitation or exclusion may not apply to you. This warranty gives you specific legal rights, and you may also have other rights which vary from state to state.

In the absence of other suitable proof of the installation date, the effective date of this warranty will be based upon the date of manufacture plus one year. Direct all notices, etc., to: Jim Murray, Inc., N116 W18455 Morse Dr., Germantown, WI 53022.

DETERMINATION OF UNIT DATE OF MANUFACTURE: (9-87) month and year stamped on pump and/or serial number on pump nameplate coded to indicate year of manufacture.

For Parts, Repair or
Technical Assistance, please contact 262.253.1353

www.jimmurrayinc.com
sales@jimmurrayinc.com

Form 998923 — Rev. 000 — 06/2016